ETHS AD 2.1 Aerodrome Location Indicator and Name

ETHS – FASSBERG

ETHS AD 2.2 Aerodrome Geographical and Administrative Data

1	ARP coordinates and site at AD	52°55.1624'N 010°11.0309'E Centre of RWY
2	Direction and distance from (city)	1.2 NM 023° from Faßberg
3	Elevation/Reference temperature	244 ft (74 m) 22.4 °C
4	Geoid undulation at AD ELEV PSN	NIL
5	MAG VAR/Annual change	4.02°E (2024)/0.18°E
6	AD Administration Address Telephone Telefax AFS E-mail	GERMAN ARMY 1./Transporthubschrauberregiment 10 Fliegerhorst Faßberg 29328 Faßberg GERMANY +49 5055 17-25111 FspNBw 2256-25111 +49 5055 17-25113 FspNBw 2256-25113 +49 5055 17-25119 FspNBw 2256-25119 ETHSZPZX FlugberatungFassberg@bundeswehr.org
7	Types of traffic permitted (IFR/VFR)	IFR / VFR
8	Remarks	NIL

FASSBERG

ETHS AD 2.3 Operational Hours

1	Aerodrome operator	MON-THU 0700-1600++ FRI 0700-1100++ CLSD HOL
2	Customs and immigration	O/R
3	Health and sanitation	HO
4	AIS Briefing Office	HO
5	ATS Reporting Office (ARO)	HO
6	MET Briefing Office	HO
7	ATS	HO
8	Fuelling	HO
9	Handling	HO
10	Security	H24
11	De-icing	Not available
12	Remarks	NIL

ETHS AD 2.4 Handling Services and Facilities

1	Cargo-handling facilities	O/R
2	Fuel/oil types	F-34, H-515, O-133, O-156
3	Fuelling facilities/capacity	Hot refuelling O/R
4	De-icing facilities	Not available
5	Hangar space for visiting aircraft	O/R
6	Repair facilities for visiting aircraft	NH90
7	Oxygen	Not available
8	Aircraft starting units	50 KVA, 30 KVA (no mobile APU)
9	Remarks	NIL

ETHS AD 2.5 Passenger Facilities

1	Hotels	Military accommodation O/R 24 HR prior in quartering area.
2	Restaurants	In Fassberg
3	Transportation	Taxi, Bus (in Fassberg)
4	Medical facilities	Dispensary, 2 ambulances
5	Bank and Post Office	In Fassberg
6	Tourist Office	In Fassberg
7	Remarks	NIL

ETHS AD 2.6 Rescue and Fire Fighting Services

1	AD category for fire fighting	ICAO Cat 7
2	Rescue equipment	Available
3	Capability for removal of disabled aircraft	2 cranes
4	Remarks	NIL

ETHS AD 2.7 Seasonal Availability – Clearing

1	Types of clearing equipment	Available
2	Clearance priorities	Not defined
3	Use of material for movement area surface treatment	Not defined
4	Specially prepared winter runways	NIL
5	Remarks	All year round usable, information on snow clearance published by SNOWTAM.

ETHS AD 2.8 Aprons, Taxiways and Check Locations/Positions Data

1	Apron surface and strength	Hangar 13RampConcretePCN 51/R/C/Y/T ApronConcretePCN 88/R/C/Y/T Hangar 10, 11, 12RampConcretePCN 18/R/B/W/T ApronConcretePCN 29/R/B/W/T Hangar 9, 9aRampConcretePCN 48/R/B/Y/T Hangar 13ApronConcretePCN 29/R/B/W/T			
2	Taxiway width, surface and strength	A B C E, E I,E II, M, W (from M - H) W, W I, W II G, H	12 m 12 m 12 m 15 m 15 m 12 m	Asphalt Concrete Concrete and asphalt Asphalt Concrete and asphalt Asphalt	PCN 99/F/A/Y/T PCN 40/R/B/W/T PCN 40/F/B/W/T PCN 99/F/A/Y/T PCN 40/F/B/W/T PCN 88/F/A/Y/T
3	Altimeter checkpoint location and elevation	Not available			
4	VOR checkpoints	Not available			
5	INS checkpoints	52°55.0197'N 010°11.3612'E (AP II)			
6	Remarks	NIL			

ETHS AD 2.9 Surface Movement Guidance and Control System and Markings

1	Use of aircraft stand ID signs, TWY guide lines and visual docking/parking guidance system of aircraft stands	Not available
2	RWY and TWY markings and LGT	Touchdown zone, RWY designator, -centre line, TWY holding position, intermediate holding position, -centre line, threshold
3	Stop bars	Not available
4	Remarks	NIL

FASSBERG

ETHS AD 2.10 Aerodrome Obstacles

See AD2 ETHS 2 - 1 AERODROME CHART

ETHS AD 2.11 Meteorological Information Provided

1	Associated MET Office	METO ETHS
2	Hours of service MET Office outside hours	HO METFC GAM Bückeburg Telephone: +49 5722 968-5992 FspNBw 2211-5992
3	Office responsible for TAF preparation Periods of validity	ETHS See GEN 3.5 para 4.7
4	Trend forecast Interval of issuance	Colour state forecast 2 h. Hourly
5	Briefing/consultation provided	General weather briefing, weather briefing present and by phone.
6	Flight documentation Language(s) used	Charts online, abbreviated plain language text. German/English
7	Charts and other information available for briefing or consultation	Chart Display/additional charts on request.
8	Supplementary equipment available for providing information	Data Display
9	ATS units provided with information	TWR, RADAR
10	Additional information (limitation of service, etc.)	Telephone: +49 5055 17-25084 FspNBw 2256-25084

ETHS AD 2.12 Runway Physical Characteristics

RWY Designator	True BRG	Dimensions of RWY (m)	Strength (PCN) and surface of RWY and SWY	THR coordinates RWY end coordinates THR geoid undulation	THR elevation and highest elevation of TDZ of precision APP RWY
1	2	3	4	5	6
09	087.71°	2440 x 30	PCN 30/R/B/W/T Concrete and asphalt	52°55.13618'N 010°09.94357'E	THR 231.9 ft TDZ 240.3 ft
27	267.74°	2440 x 30		52°55.18847'N 010°12.11831'E	THR 244.0 ft TDZ 244.0 ft

Slope of RWY-SWY	SWY dimensions (m)	CWY dimensions (m)	Strip dimensions (m)	OFZ	Remarks
7	8	9	10	11	12
0.2% / 0.1% / 1220 m / 1220 m	Not available	Not available	2560 x 300	NIL	NIL
-0.1% / -0.2% 1220 m / 1220 m	Not available	Not available		NIL	NIL

ETHS AD 2.13 Declared Distances

RWY Designator	TORA (m)	TODA (m)	ASDA (m)	LDA (m)	Remarks
1	2	3	4	5	6
09	2440	2440	2440	2440	NIL
27	2440	2440	2440	2440	NIL

ETHS AD 2.14 Approach and Runway Lighting

RWY Designator	APCH LGT type length INTST	THR LGT colour WBAR	VASIS (MEHT) PAPI	TDZ LGT length	RWY Centre Line LGT length spacing colour INTST	RWY Edge LGT length spacing colour INTST	RWY End LGT colour WBAR	SWY LGT colour length	Remarks
1	2	3	4	5	6	7	8	9	10
09	NIL	Green LIH	PAPI 3.0°	Not available	Not available	White LIH	Not available	Not available	Red lights at OVRN
27	Modified NATO-standard LIH AFLS	Green LIH	PAPI 3.0°	Not available	Not available	White LIH	Not available	Not available	Red lights at OVRN

ETHS AD 2.15 Other Lighting, Secondary Power Supply

1	ABN/IBN location, characteristics and hours of operation	ABN: white / green, on TWR
2	LDI location and LGT Anemometer location and LGT	Available, unlighted Anemometer: 52°54.9359'N 010°11.6578'E, 121° (T) 819 m from ARP, lighted
3	TWY edge and centre line lighting	Blue, LIH
4	Secondary power supply/switch-over time	Available without delay
5	Remarks	Obstruction lighting available.

ETHS AD 2.16 Helicopter Landing Area

1	Coordinates TLOF or THR of FATO Geoid undulation	1. AIMING POINT I, 52°55.04'N 010°10.87'E 2. AIMING POINT II, 52°55.02'N 010°11.36'E 3. AIMING POINT III, 52°54.74'N 010°11.29'E 4. NORTHLANE 09/27, THR 09 52°55.24'N 010°10.88'E THR 27 52°55.26'N 010°11.59'E 5. SOUTHLANE 06/24, THR 06 52°54.76'N 010°11.47'E THR 24 52°54.86'N 010°11.79'E
2	TLOF and/or FATO elevation	1. 74 m/242 ft 2. 74 m/243 ft 3. 72 m/235 ft 4. THR 09 73 m/239 ft, THR 27 72 m/237 ft 5. THR 06 72 m/235 ft, THR 24 73 m/240 ft
3	TLOF and FATO area dimensions, surface, strength, marking	1. 9 m triangle, Asphalt, PCN 99/F/A/Y/T, white triangle 2. 9 m triangle, Asphalt, PCN 99/F/A/Y/T, white triangle 3. 9 m triangle, Asphalt, PCN 29/R/B/W/T, white triangle 4. 800 x 50 m, Grass 5. 400 x 45 m, Grass
4	True BRG of FATO	1. 090°/270° (T) 2. 090°/270° (T) 3. 090°/270° (T) 4. 088.18°/268.18° (T) 5. 063.31°/243.31° (T)
5	Declared distance available	1. 9 m triangle 2. 9 m triangle 3. 9 m triangle 4. 800 m 5. 400 m
6	APP and FATO lighting	Not available
7	Remarks	See AD 2.20 (2)

FASSBERG

ETHS AD 2.17 ATS Airspace

1	Designation and lateral limits	FASSBERG CTR, see AIP Germany ENR 2.1
2	Vertical limits	GND-2500 ft MSL
3	Airspace classification	D
4	ATS unit call sign Language(s)	FASSBERG TOWER German, English
5	Transition altitude	5000 ft MSL
6	Remarks	NIL

ETHS AD 2.18 ATS Communication Facilities

Service designation	Call sign	Frequency	Hours of operation	Remarks
1	2	3	4	5
		243.000 MHz	HO	Emergency frequencies for all services
		121.500 MHz	HO	
RADAR	FASSBERG RADAR	389.675 MHz	HO	SSR Mode Codes
		398.200 MHz	HO	3/A 4220 - 4227
		336.475 MHz	HO	
		119.355 MHz	HO	
		123.300 MHz	HO	
TWR	FASSBERG TOWER	292.425 MHz	HO	
		257.800 MHz	HO	
		118.525 MHz	HO	
		122.100 MHz	HO	
		42.400 MHz	HX	

ETHS AD 2.19 Radio Navigation and Landing Aids

Type of aid MAG VAR, Type of supported OPS (for VOR/ILS/ MLS give declination)	ID	Frequency	Hours of operation	Position of transmitting antenna coordinates	Elevation of DME transmitting antenna	Service volume radius GBAS	Remarks
1	2	3	4	5	6	7	8
NIL	NIL	NIL	NIL	NIL	NIL	NIL	NIL

ETHS AD 2.20 Örtliche Besonderheiten

1. Für Flächenluftfahrzeuge ist nach vorheriger Genehmigung (24 h PPR) die Nutzung der Piste 09/27 möglich.

2. Grasstreifen 09/27 (NORTHLANE) für Prop-Flugzeuge und Notlandungen.

3. Grasstreifen 06/24 (SOUTHLANE) ist nur für Hubschrauber freigegeben.

4. Segelflug- und Leichtflugzeugbetrieb MON-FRI von 1700++ - SS, SAT, SUN und HOL von SR-SS bis 6000 ft MSL im Umkreis von 5 NM um den ARP.
Kontaktaufnahme mit FASSBER INFO auf 122.425 MHz.

5. Hallenvorfeld, Abstellflächen und Rollwege videoüberwacht.

6. Hindernis in Endanflug RWY 27 (Baumbestand 1100 m vor THR).

7. Schärffläche E1, asphalt, PCN 99/F/A/Y/T, siehe Flugplatzkarte.

8. Laserstrahlung bei 52°54.56'N 010°11.19'E, durch Nutzung eines Lasers der Klasse 1M (Wolkenhöhenmesser). Es darf nicht direkt mit vergrößernder Optik in den Laser geblickt werden.

ETHS AD 2.20 Local Traffic Regulations

1. For fixed-wing aircraft, after prior approval (24 h PPR) use of RWY 09/27 possible.

2. LANE 09/27 (NORTHLANE) for prop aircraft and emergency landings.

3. LANE 06/24 (SOUTHLANE) is cleared for helicopter only.

4. Glider and light aircraft flying MON-FRI from 1700++ - SS, SAT, SUN and HOL from SR-SS up to 6000 ft MSL, radius 5 NM of ARP. Contact FASSBERG INFO on 122.425 MHz.

5. APRON, PARKING POSITION and TWY under video surveillance.

6. Check close in obstacle final approach sector RWY 27 (stock of trees 1100 m before THR).

7. Arming-/dearmingpad E1, asphalt, PCN 99/F/A/Y/T, see aerodrome chart.

8. Laser radiation by class 1M laser product (ceilometer) at position 52°54.56'N 010°11.19'E. Do not view directly with optical instruments.

ETHS AD 2.21 Verfahren zur Lärmvermeidung

NIL

ETHS AD 2.21 Noise Abatement Procedures

NIL

ETHS AD 2.22 Flugverfahren

1. IFR-Verfahren

Die Instrumentenanflug- und Instrumentenabflugverfahren wurden gemäß den auf der jeweiligen Verfahrensseite angegebenen Kriterien erstellt.

Instrumentenanflüge- und Instrumentenabflüge sind trotz aktivierter ED-R 33A möglich. Es bedarf einer vorherigen Koordination.

ETHS AD 2.22 Flight Procedures

1. IFR procedures

The instrument approach and departure procedures are established in accordance with the criteria stated on the individual procedure chart.

Instrument approach and departure are possible, even if the ED-R 33A is activated. Coordination for the passage will be done.

ETHS AD 2.23 Zusätzliche Informationen

NIL

ETHS AD 2.23 Additional Information

NIL

ETHS AD 2.24 Charts related to an Aerodrome

AERODROME CHART ..... AD 2 ETHS 2 - 1
LONGITUDINAL PROFILES OF RUNWAYS AND STOPWAYS... AD 2 ETHS 2 - 2
MINIMUM VECTORING ALTITUDES ..... AD 2 ETHS 2 - 3
LIST OF COORDINATES FOR MVA ..... AD 2 ETHS 2 - 4
AERODROME CHART ..... CENOR FLIP VOL 2
HS 109 - 127 ..... CENOR FLIP VOL 2
AERODROME CHART ..... GEMIL FLIP VAD
AERODROME INFORMATION..... GEMIL FLIP VAD
ARR/DEP RWY 09/27 A..... GEMIL FLIP VAD
ARR/DEP RWY 09/27 B..... GEMIL FLIP VAD

ETHS AD 2.25 Penetration der visuellen Segmentoberfläche (VSS)

NIL

ETHS AD 2.25 Visual segment surface (VSS) penetration

NIL

Seite absichtlich leer gelassen

Page intentionally left blank

AERODROME CHART FASSBERG

ARP: 52°55.1624'N 010°11.0309'E

AD ELEV: 244 ft

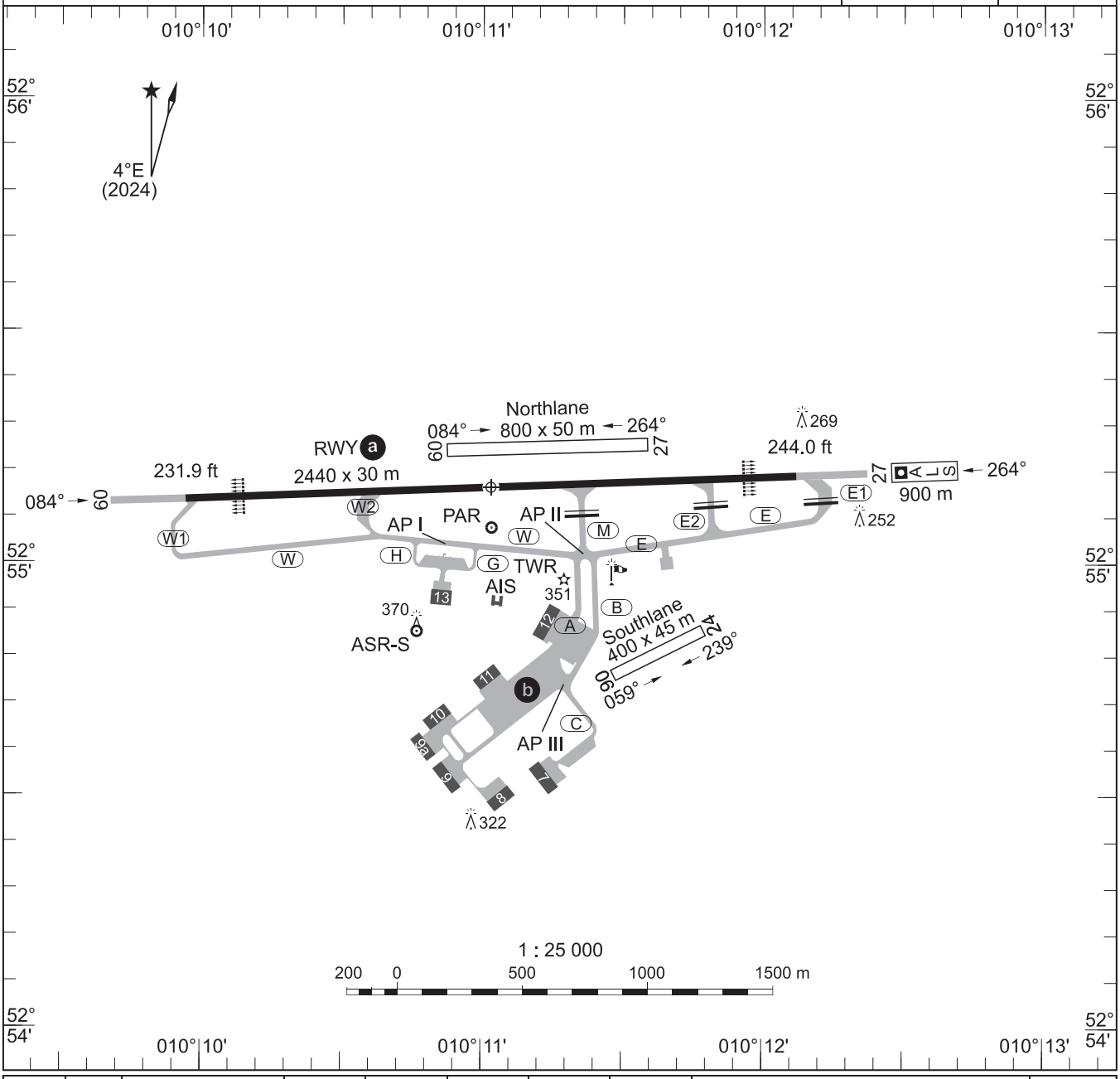

RWY	MAG BRG	PCN	TORA (m)	TODA (m)	ASDA (m)	LDA (m)	PAPI	THR COORDINATES		TDZE (ft)
09	084°	30 R/B/W/T	2440	2440	2440	2440	3.0°	52°55.13618'N	010°09.94357'E	240.3
27	264°	30 R/B/W/T	2440	2440	2440	2440	3.0°	52°55.18847'N	010°12.11831'E	244.0

a For fixed-wing aircraft prior approval (24h PPR) use of RWY 09/27 possible.

b APRON, PARKING POSITIONS and TWY under video surveillance.

AP AIMING POINT
E1 ARMING / DEARMING PAD

CHANGE: EDITORIAL (014/25)

LONGITUDINAL PROFILES OF RUNWAYS AND STOPWAYS — FASSBERG

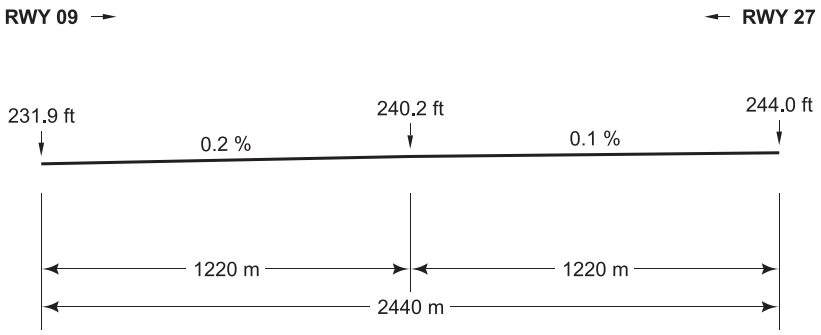

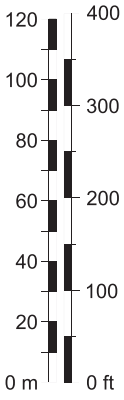

1 : 2 500

1 : 25 000

200 0 500 1000 1500 m

500 0 1000 2000 3000 4000 ft

CHANGE: REVISED CHART (017/25)

MINIMUM VETORING ALTITUDES (MVA) / AREA OF RESPONSIBILITY (AOR)

FASSBERG — **TA 5000**

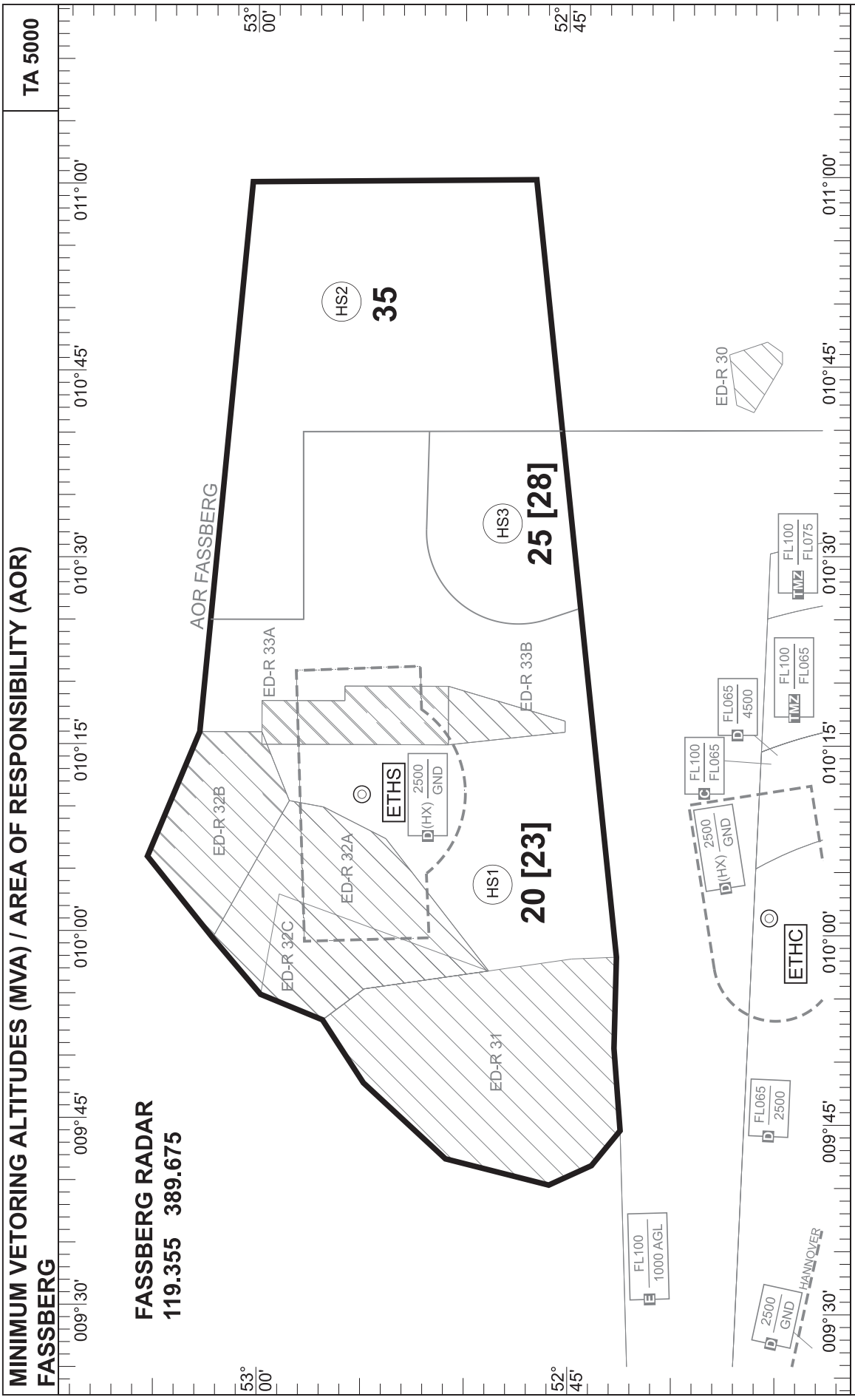

The MVA is the lowest altitude which may be used for radar vectors for IFR flights, taking into account the minimum safe height (1000 ft above the highest obstacle within a radius of 8 km) and airspace structure (lower limit of the controlled airspace plus a buffer of 500 ft). Below the MVA, IFR flights will normally be cleared on published IFR procedures only.

Altitudes in 100 ft-units (50 = 5000 ft).

Values in brackets consider additional height margins in order to meet required obstacles clearance at cold temperatures. These raised MVA values are generally valid for the time period between AIRAC date NOV and AIRAC date MAR.

CHANGE: EDITORIAL (011/25)

LIST OF COORDINATES FOR MVA FASSBERG

HS1 53°05.50'N 010°06.00'E
53°03.00'N 010°16.00'E
53°02.80'N 010°19.67'E
53°02.50'N 010°25.00'E
52°58.00'N 010°25.00'E
52°58.00'N 010°40.00'E
52°51.92'N 010°40.00'E
52°52.07'N 010°32.18'E
anticlockwise on the arc of a circle with
8.2 km radius centred at
52°47.64'N 010°31.95'E
to
52°46.24'N 010°25.01'E
52°44.62'N 010°25.90'E
52°44.39'N 010°22.07'E
52°44.02'N 010°16.27'E
52°42.83'N 009°58.17'E
52°42.92'N 009°50.92'E
52°42.58'N 009°44.38'E
52°43.95'N 009°41.58'E
52°46.00'N 009°40.00'E
52°51.00'N 009°42.00'E
52°55.00'N 009°48.00'E
52°57.00'N 009°53.00'E
53°00.00'N 009°55.00'E
53°02.33'N 009°59.50'E
53°05.50'N 010°06.00'E

HS2 53°02.50'N 010°25.00'E
53°01.57'N 010°40.00'E
53°00.37'N 011°00.00'E
52°46.68'N 011°00.00'E
52°45.50'N 010°40.00'E
52°51.92'N 010°40.00'E
52°58.00'N 010°40.00'E
52°58.00'N 010°25.00'E
53°02.50'N 010°25.00'E

HS3 52°51.92'N 010°40.00'E
52°52.07'N 010°32.18'E
anticlockwise on the arc of a circle with
8.2 km radius centred at
52°47.64'N 010°31.95'E
to
52°46.24'N 010°25.01'E
52°44.62'N 010°25.90'E
52°45.50'N 010°40.00'E
52°51.92'N 010°40.00'E